# SOLAR SECTIONS

SPS1046169 0.195 Kg/m

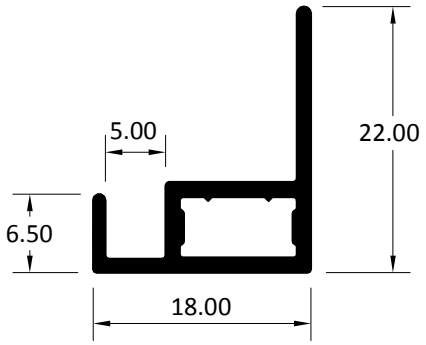


SPS2046122 0.260 Kg/m

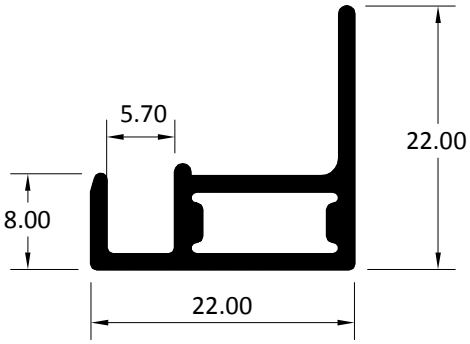


SPS2046115 0.280 Kg/m

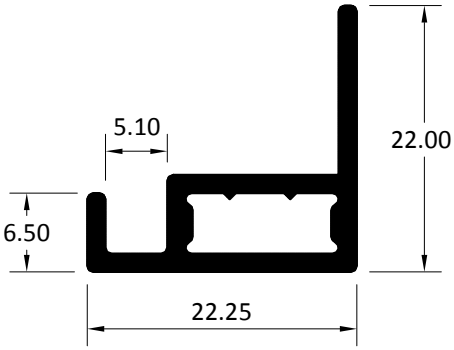


SPS1046103 0.345 Kg/m

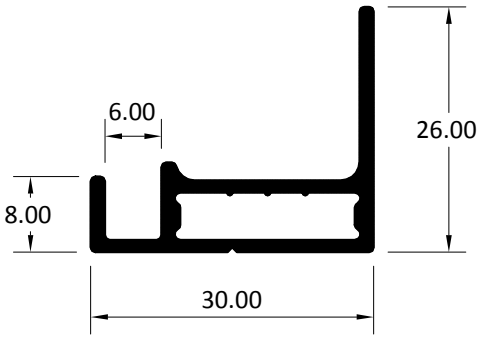


SPS1046144 0.343 Kg/m

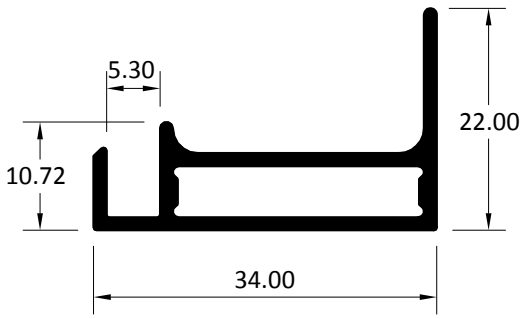


SPS1046277 0.382 Kg/m

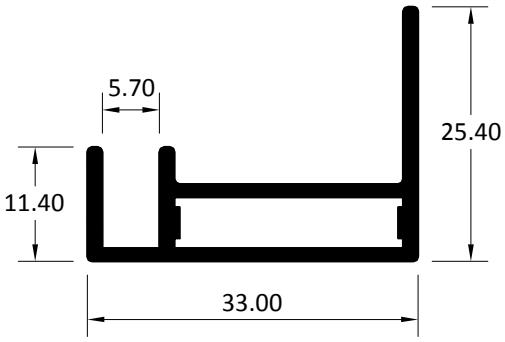


SPS1046111 0.386 Kg/m

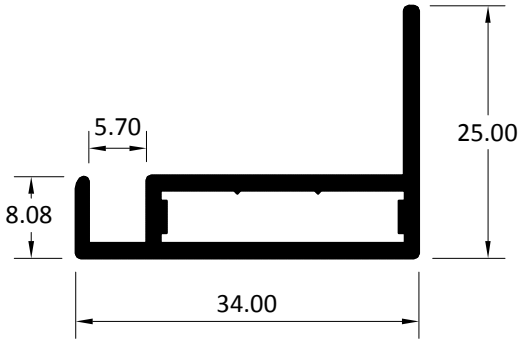


SPS1046809 0.405 Kg/m

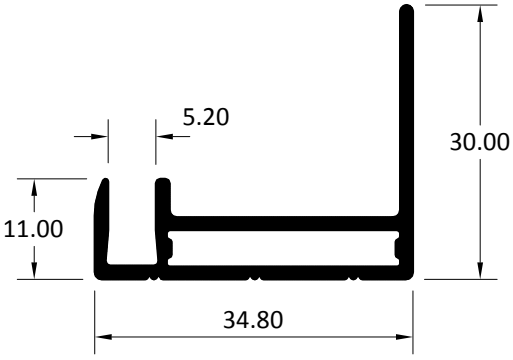

SPS1046396 0.365 Kg/m

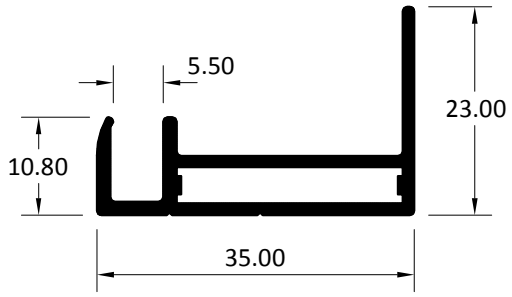


SPS1046727 0.384 Kg/m

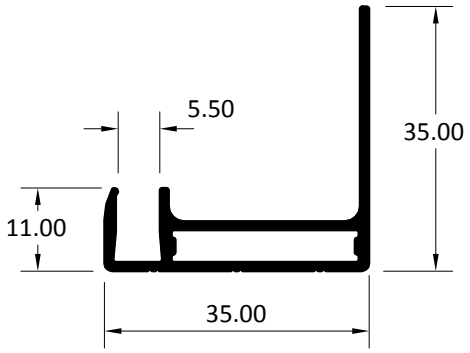


SPS1046014 0.375 Kg/m

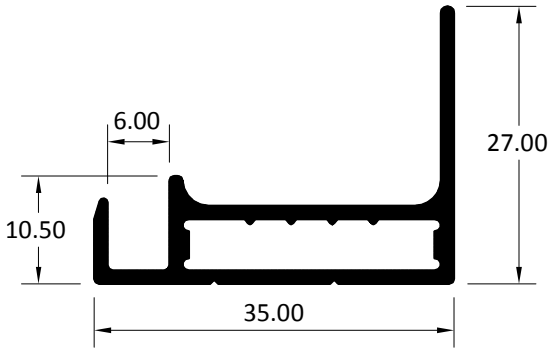


SPS1046743 0.344 Kg/m

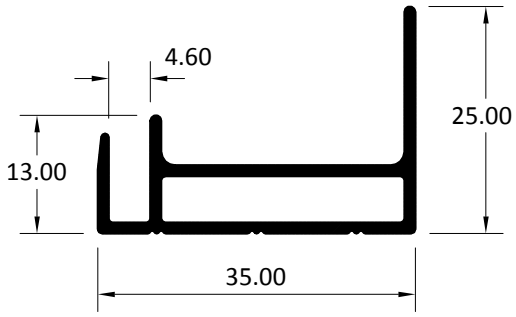


SPS1046151 0.374 Kg/m

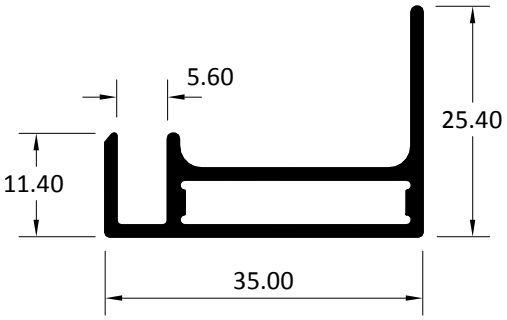


SPS1046223 0.409 Kg/m

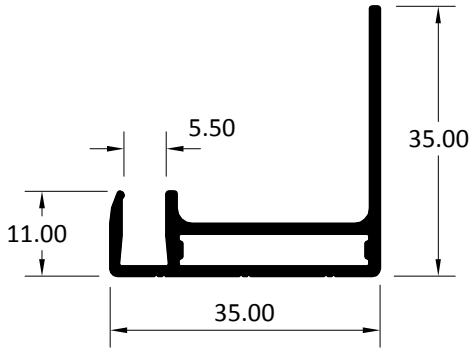


SPS1046726 0.320 Kg/m

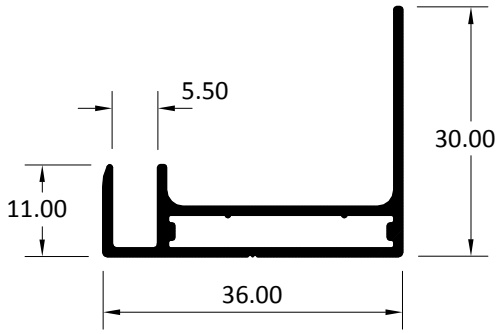


SPS1046274 0.523 Kg/m

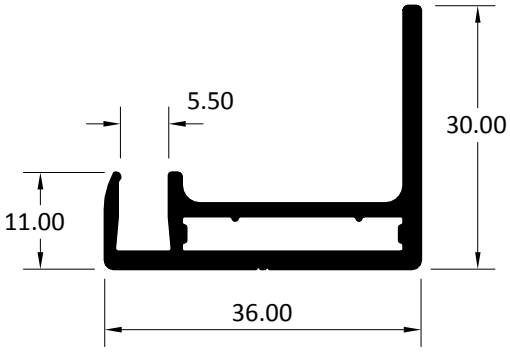

# SOLAR SECTIONS

SPS1046324 0.474 Kg/m

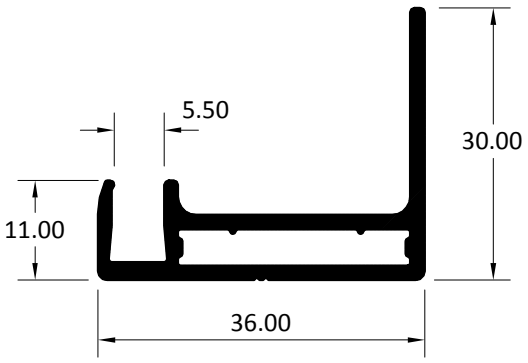


SPS1046538 0.398 Kg/m

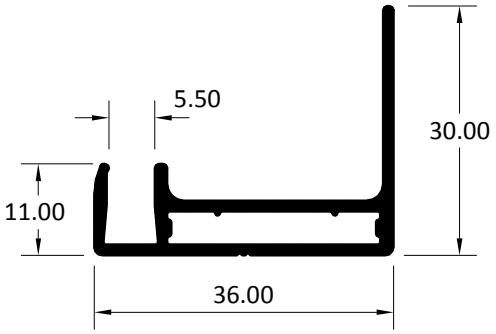


SPS1046397 0.460 Kg/m

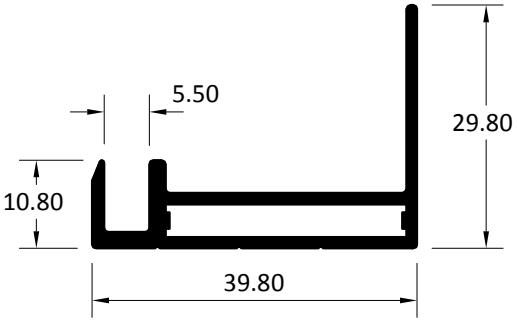


SPS1046009 0.477 Kg/m

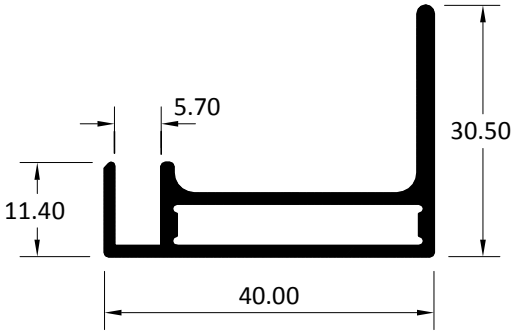


SPS1046521 0.449 Kg/m

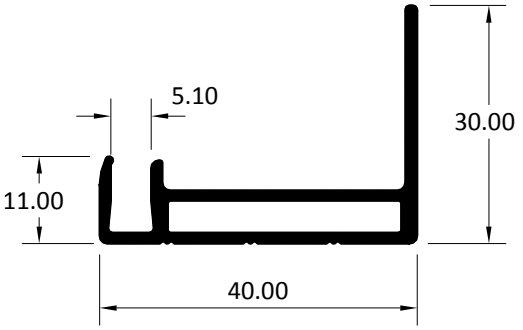


SPS1046843 0.428 Kg/m

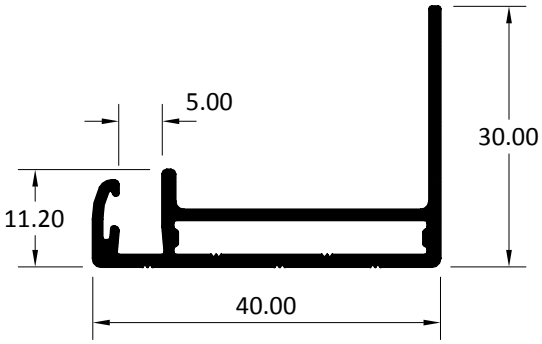


SPS1008337 0.562 Kg/m

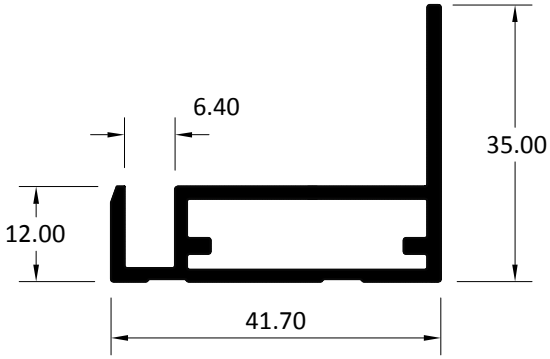


SPS1046922 0.564 Kg/m

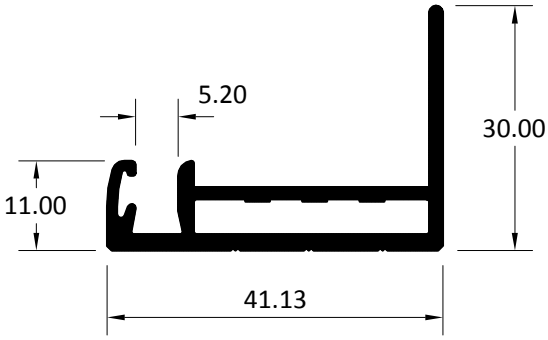

SPS1046146 0.511 Kg/m

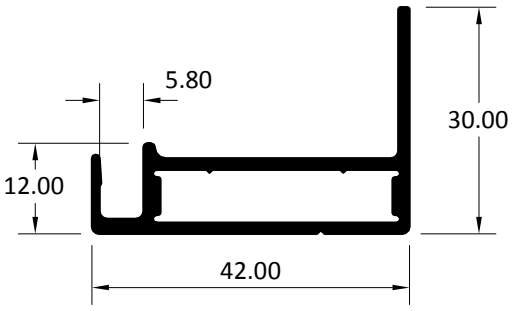


SPS1046323 0.501 Kg/m

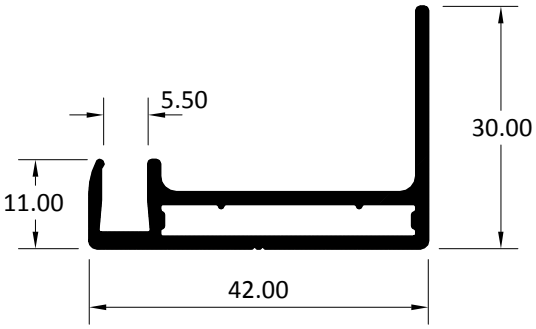


SPS1046273 0.579 Kg/m

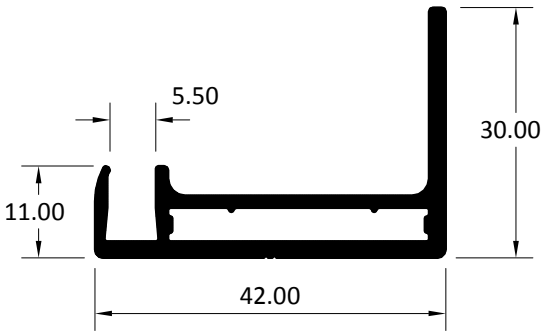


HAD2007475 0.630 Kg/m

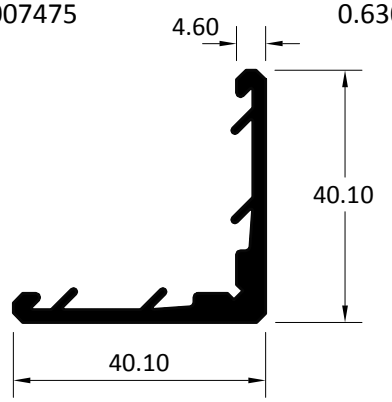


SPS2046010 0.815 Kg/m

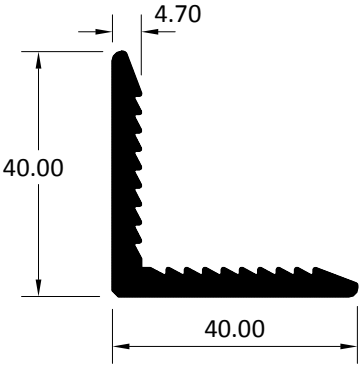


SPS2046471 0.517 Kg/m

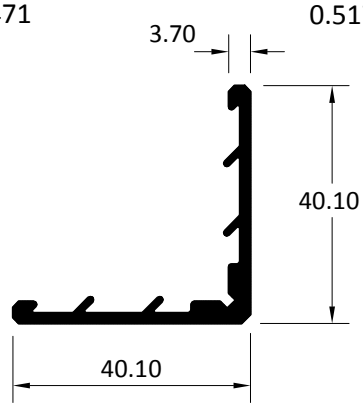


SPS2046091 1.334 Kg/m

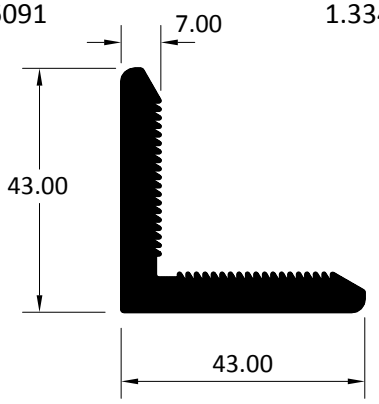


SPS2046145 0.912 Kg/m

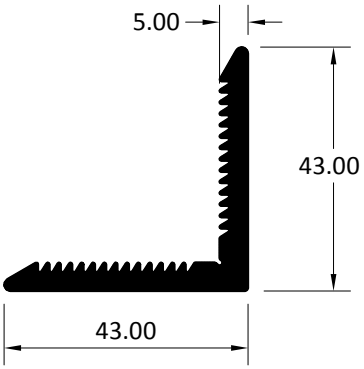

SPS2046224 0.699 Kg/m

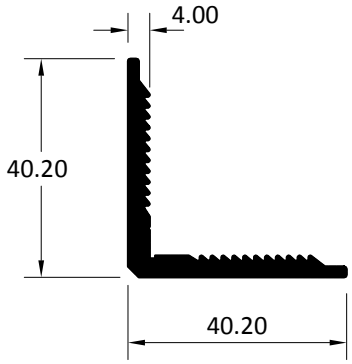


SPS2046842 0.681 Kg/m

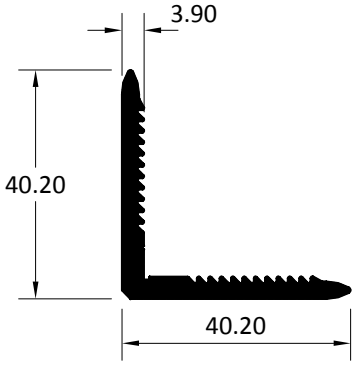


SPS2046147 1.042 Kg/m

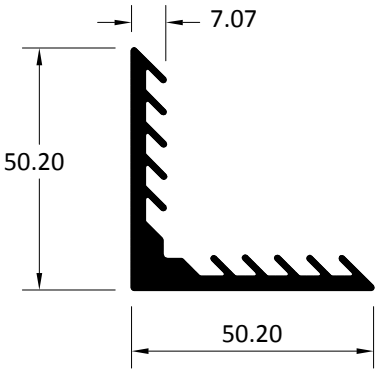


SPS2046920 0.736 Kg/m

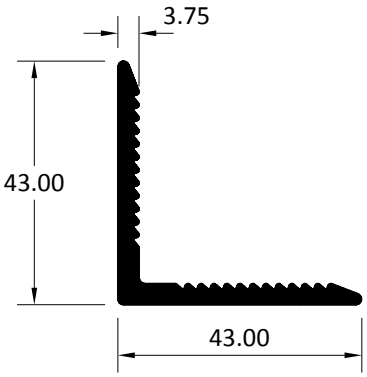


SPS2008454 0.884 Kg/m

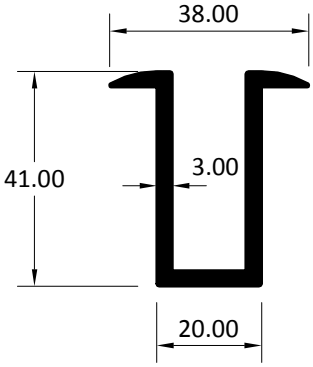


SPS1046539 0.805 Kg/m

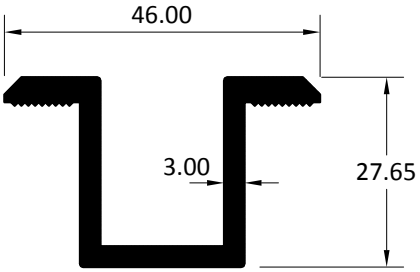


SPS2008455 0.576 Kg/m

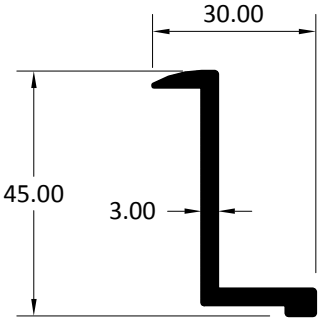


SPS2046553 0.605 Kg/m

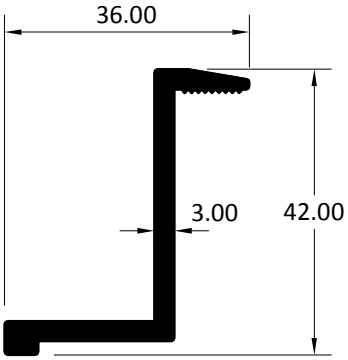

SPS2008453 0.560 Kg/m

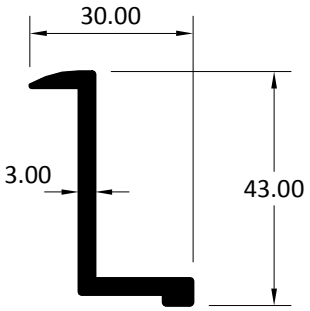


HTR2003344 0.740 Kg/m

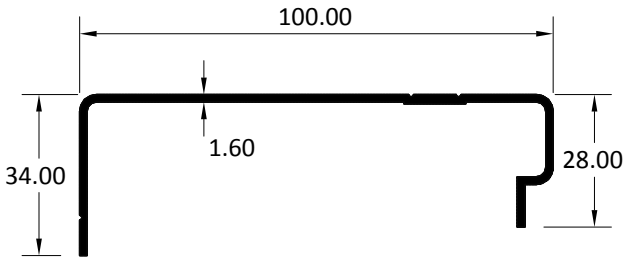


SPS1046081 0.536 Kg/m

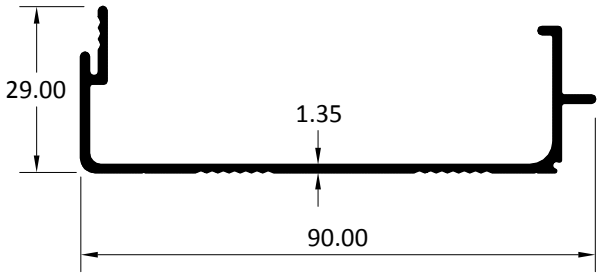


SPS1046082 0.650 Kg/m

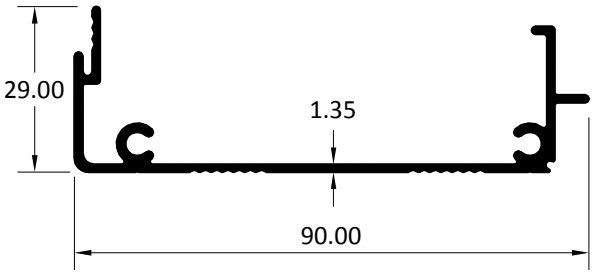


SPS1046301 0.931 Kg/m

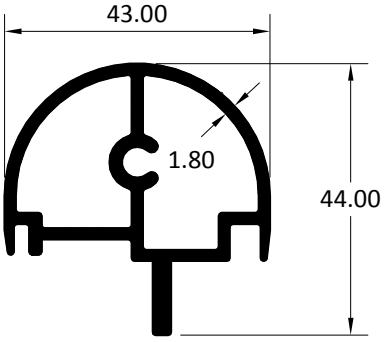


SPS1046083 0.114 Kg/m

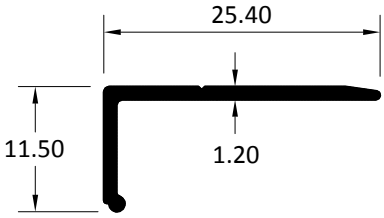


SPS2046302 0.457 Kg/m

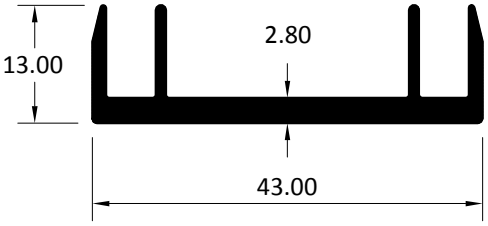


SPS1046616 0.938 Kg/m

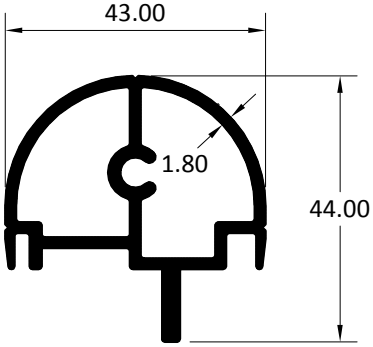

SPS2046617 0.393 Kg/m

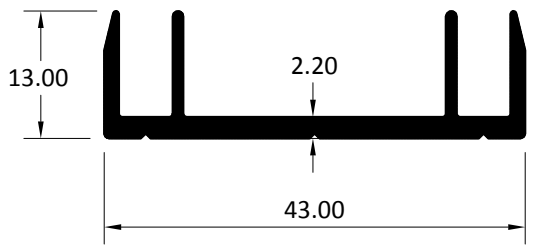


SPS3046185 3.462 Kg/mtr

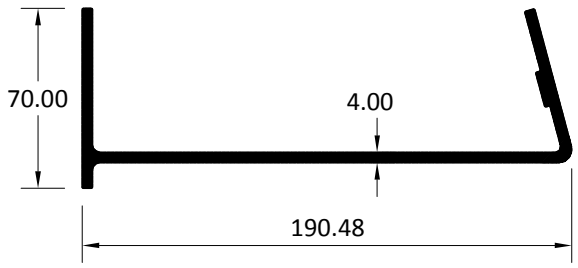


SPS2046303 0.837 Kg/mtr

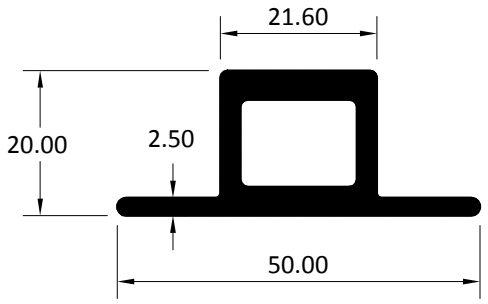


SPS1046312 0.686 Kg/mtr

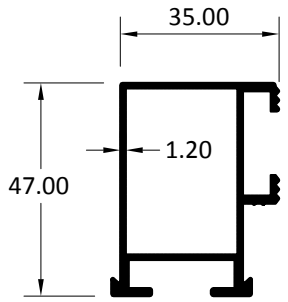


SPS1046184 0.862 Kg/mtr

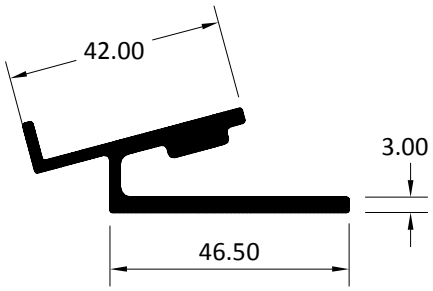


SPS3046171 0.840 Kg/mtr

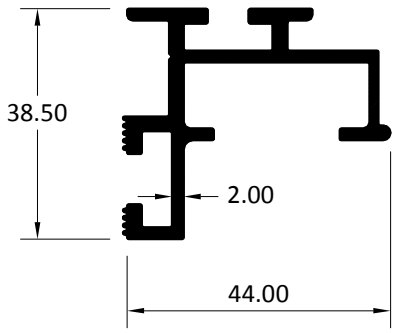


SPS2046300 0.781 Kg/mtr

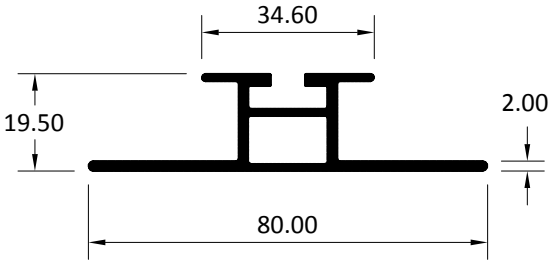


SPS3046592 1.679 Kg/mtr

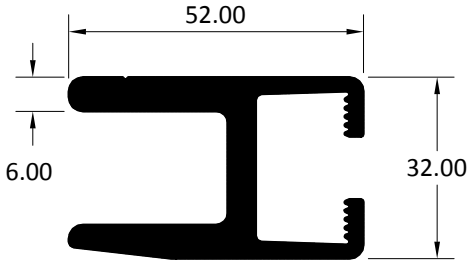

SPS1046263 0.818 Kg/m

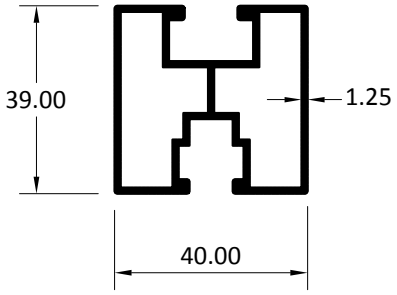


SPS1046353 0.851 Kg/m

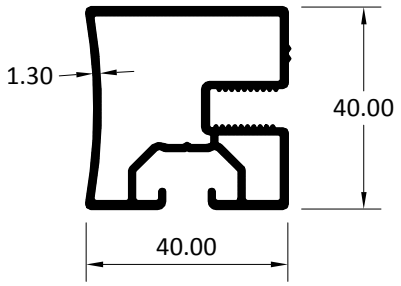


SPS2046527 1.399 Kg/m

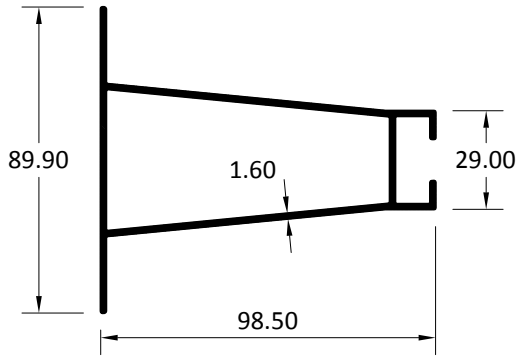


SPS2008433 1.216 Kg/m

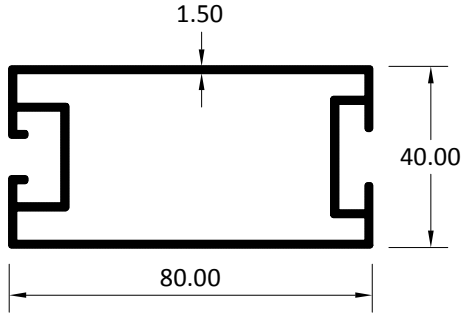


SPS2046526 0.532 Kg/m

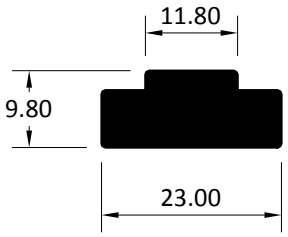


SPS1046819 0.807 Kg/m

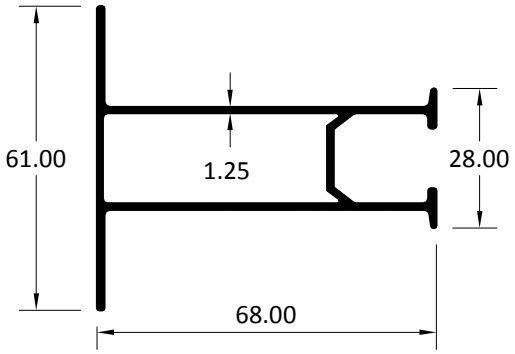


SPS2046569 0.741 Kg/mtr

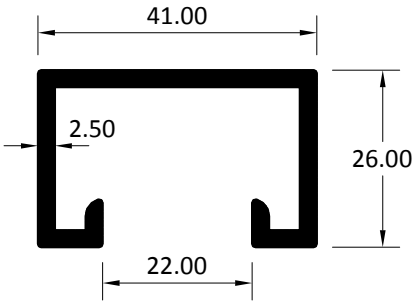


SPS1046831 1.219 Kg/m

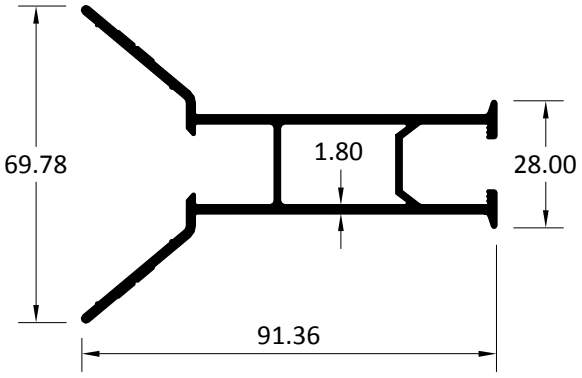

SPS2046525 2.094 Kg/m

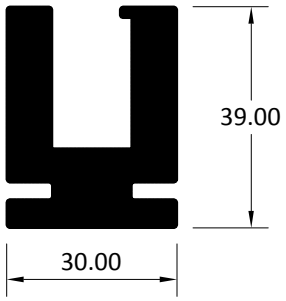


SPS3046565 2.203 Kg/m

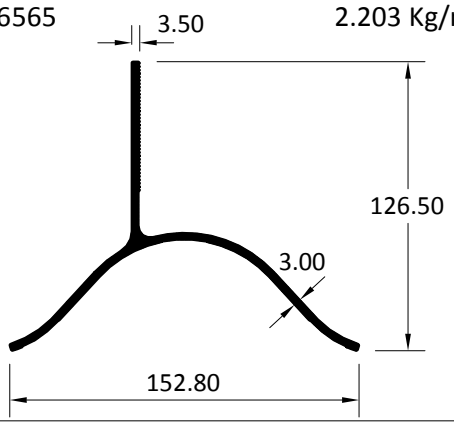


SPS3046636 5.705 Kg/m

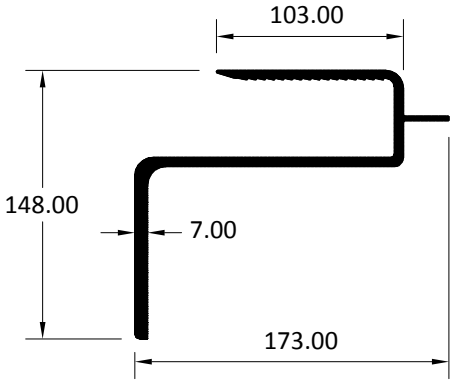


SPS3046327 1.909 Kg/m

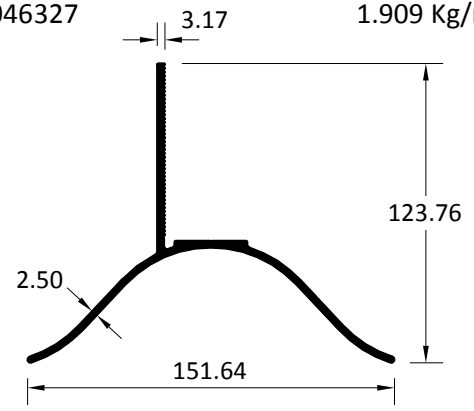


SPS2046685 1.635 Kg/m

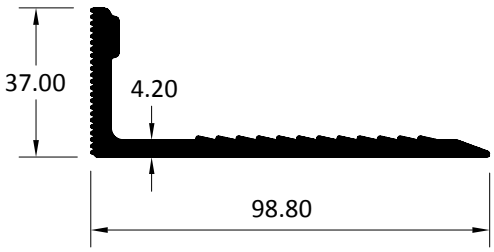


SPS3046684 4.196 Kg/m

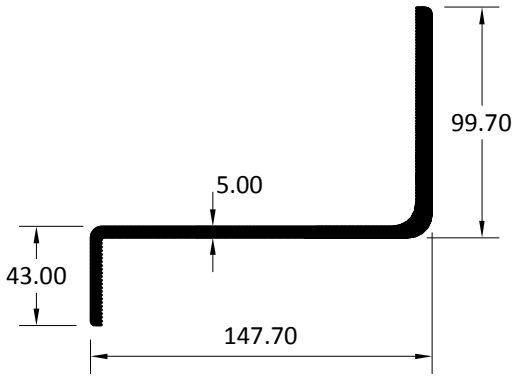

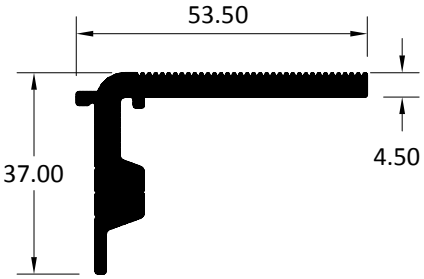
SPS2046669 1.055 Kg/m